Machine Specifications

ITEM			SVW 2113	SVW 3113	SVW 4113	SVW 2217	SVW 2817	SVW 3217	SVW 4217	SVW 2822	SVW 3222	SVW 4222	SVW 3223	SVW 4223	SVW 2825	SVW 3225	SVW 4225
TABLE																	
Overall size	Length	mm	2000	3000	4000	2000	2600	3000	4000	2600	3000	4000	3000	4000	2600	3000	4000
	Width	mm	1100			1400				1800			2000				
T slots		mm	22														
Max. loading		ton	4	6	8	8	9	10	14	11	12	15	12	15	11	12	15
TRAVEL																	
X axis		mm	2100	3100	4100	2200	2800	3200	4200	2800	3200	4200	3200	4200	2800	3200	4200
Y axis		mm	1200			1600				2100					2500		
Z axis		mm	800(OPT 1000)														
DISTANCE																	
Between two columns		mm	1300			1700				2200			2300		2500		
Spindle nose to table top	Z=800mm	mm	150~950			240~1040											
	Z=1000mm	mm	150~1150			240~1240											
SPINDLE																	
Speed		rpm	6000(OPT8000)(#50) (OPT 12000/15000)(#40)			6000(4000/8000)(#50) (OPT 12000/15000)(#40)											
Taper			BT/DIN/CAT 50(#40)														
Motor(cont/30min/S3-25%)		kW	15/18.5/25 (22/26/35)														
ATC																	
No. of ATC		tools	24(32/40)			24(32/40/60)											
Max. Dia of tool		mm	24T : ø 110 (with Adjacent Tool) ， ø 200 (without Adjacent Tool) / OPT : 32T/40/60 ø125(with Adjacent Tool) ， ø 250 (without Adjacent Tool)														
Max. length of tool		mm	24T : 350 / OPT : 32T/40/60 : 400														
Max. tool weight		kg	24T :18 / OPT : 32T/40/60 : 25														
FEED RATE																	
Rapid feedrate X/Y/Z		m/min	24/24/20		20/24/20	15/15/15		12/15/15		15/15/15	12/15/15				15/15/15	12/15/15	
Cutting feedrate		mm/min	1~10000														
Min. Setting		mm	0.001														
COOLANT & LUBRICATION																	
Hydraulic tank volume		L	70														
Lubrication tank volume		L	8														
Coolant tank volume		L	450			584				680					760		
MISCELLANEOUS																	
Machine Weight		tons	18	20	22	20	22	24	28	23	25	29	26	30	26	28	32
Power required		kVA	40		50	40			50	40		50	40	50	40		50
Compressed air pressure		kg/cm^2	7														
Compressed oil pressure		kg/cm^2	70														
Floor space	Length	mm	6350	8350	10350	6350	7550	8350	10350	7550	8350	10350	8350	10350	7550	8350	10350
	Width	mm	4600			5000				5500			5700		6200		
Controller			FANUC 0i-MF (32i-M / 31i-M) MITSUBISHI (M80/M800) 、SIEMENS (840DSL/828D) HEIDENHAIN (TNC 640/ TNC 620)														

★ Specifications subject to change without prior notice.

Standard Features & Accessories

- A.T.C. 24
- Automatic power off
- AICC II (200 Block / 30m)(Opt for Column 1300mm)
- Automatic lubrication system
- Heat exchanger in cabinet
- Levelling bolts & pads
- M.P.G.
- Machine & controller manuals
- RS-232C & RJ-45 terminal interface
- Splash guard
- Spindle oil cooler
- Spindle speed 6000rpm
- Spindle air blast system
- Spindle motor 15/18.5kW
- Screw auger & chain type chip conveyors & cart
- Tools box for machine adjustment
- Working lamp & alarm lamp

Optional Accessories

- Auxiliary work table
- Auto heat compensation
- Air condition in electric cabinet
- Auto tool change: 32/40/60 TOOLS
- Auto attachment changer system (AAC) (for SVW-2217~4225)
- CNC rotary table
- Cutting coolant mist device
- Coolant through spindle
- Full splash guard with roof
- Workpiece coordinate measuring (OMP 60)
- X/Y/Z axis linear scales
- Z axis box way

FAIR FRIEND • ENGINEERING • EXCELLENCE • LEADERSHIP • EXPERTISE • RELIABILITY

FAIR FRIEND GROUP

HEADQUARTERS
No. 186, Yong Chi Road, Taipei, Taiwan.
Tel:+886-2-2763-9696
Fax:+886-2-2768-0636/37/39
www.ffg-tw.com
E-mail: chairom@fairfriend.com.tw

FEELER® FAIR FRIEND GROUP
FAIR FRIEND ENTERPRISE CO., LTD.

FEELER MACHINE TOOLS DIVISION
No.12, Jingke Rd., Nantun Dist.,
Taichung City, Taiwan
Tel:+886-4-2359-4075
Fax:+886-4-2359-4873
www.feeler.com
E-mail: sales@feeler.com

BIG MACHINE DEP.
No.40-33, Bogong Valley,
SanYi Township, Miaoli County 36744,
SanYi Industrial Park, Taiwan, R.O.C.
Tel : 886-37-870777
Fax : 886-37-870770
www.feeler.com
E-mail: sales@feeler.com

TOP 100 TAIWAN BRAND

ISO 9001
ISO 14001

Website Facebook

20.09.1000-S601000001

SVW SERIES

CNC Double Column Machining Center

SVW-2217~4225

Best Research & Development Team.
Strict Quality Control, High Production Efficiency.

Box structure with enhanced rib design, ensure high stability and rigidity of machine.
Working table fully supported by linear guide ways with NO overhanging.

The gear-driven spindle with two-step gear box.
Low gear provide high torque, good for heavy cutting.
High gear improves machining accuracy.

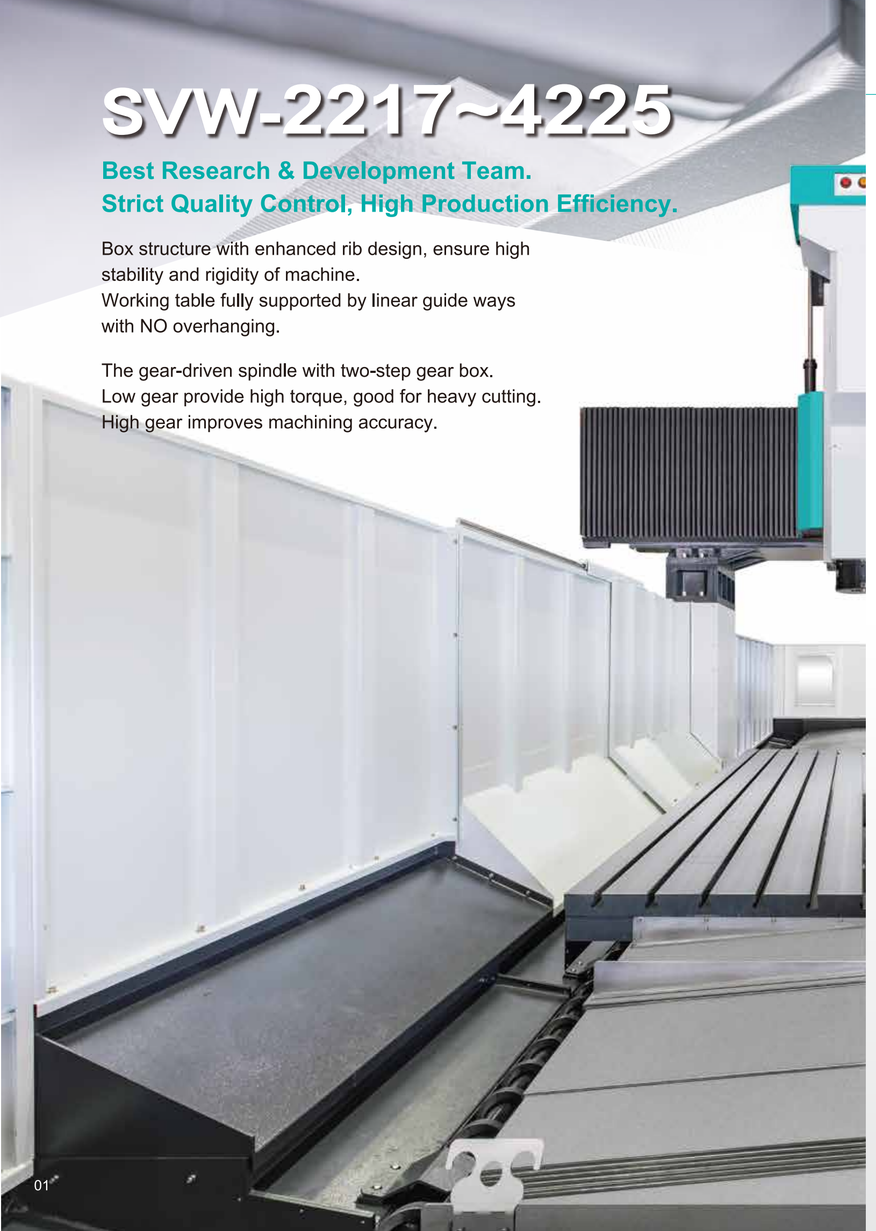

SVW-2217~4225 AAC auto change system Orthogonal Milling head 3500 rpm -Vertical Machining

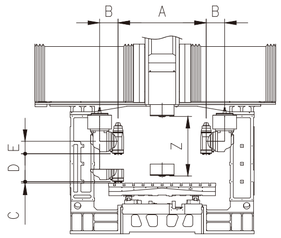

Column Distance	Y-axis travel	A	B	E	Z-axis travel 800		Z-axis travel 1000	
					Column extend			
					0	300	0	300
	OPT				C ~ C+D (Spindle Nose to Table Top)			
1700	1600	980	310	209	24~294 (C=24)	324~594 (C=24)	24~494 (C=24)	324~794 (C=24)
2200	2100	1480						
2300	2100	1480						
2500	2500	1880						

SVW-2217~4225 AAC auto change system Orthogonal Milling head 3500 rpm -Horizontal Machining

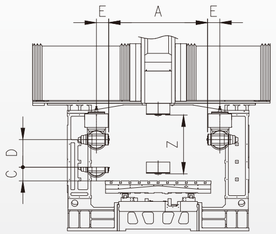

Column Distance	Y-axis travel	A	E	Z-axis travel 800		Z-axis travel 1000	
				Column extend			
				0	300	0	300
	OPT			C ~ C+D (Spindle Nose to Table Top)			
1700	1600	1182	209	233~503 (C=233)	533~803 (C=233)	233~703 (C=233)	533~1003 (C=233)
2200	2100	1682					
2300	2100	1682					
2500	2500	2082					

Floor Space & Machine Layout

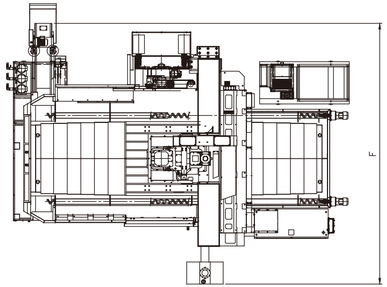

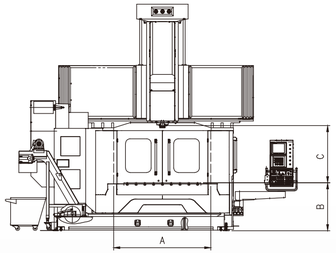

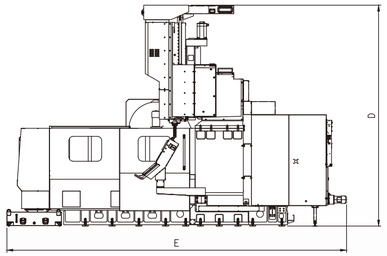

Unit : mm

Model	A-Between Two Columns	B-Table to Ground	C-Spindle Nose to Table Top		D-Machine Height		E-Machine Length	F-Machine Width
			Z=800	Z=1000	Z=800	Z=1000		
SVW-2113	1320	780	150~950	150~1150	4200	4600	6350	4600
SVW-3113							8350	
SVW-4113							10350	
SVW-2217	1770	850	240~1040	240~1240	4200	4800	6350	5000
SVW-2817							7550	
SVW-3217							8350	
SVW-4217							10350	
SVW-2822	2270						7550	5500
SVW-3222							8350	
SVW-4222							10350	
SVW-3223	2370						8350	5700
SVW-4223							10350	
SVW-2825	2570						7550	6200
SVW-3225							8350	
SVW-4225							10350	

SVW-2217~4225

Best Research & Development Team.
Strict Quality Control, High Production Efficiency.

Box structure with enhanced rib design, ensure high stability and rigidity of machine.
Working table fully supported by linear guide ways with NO overhanging.

The gear-driven spindle with two-step gear box.
Low gear provide high torque, good for heavy cutting.
High gear improves machining accuracy.

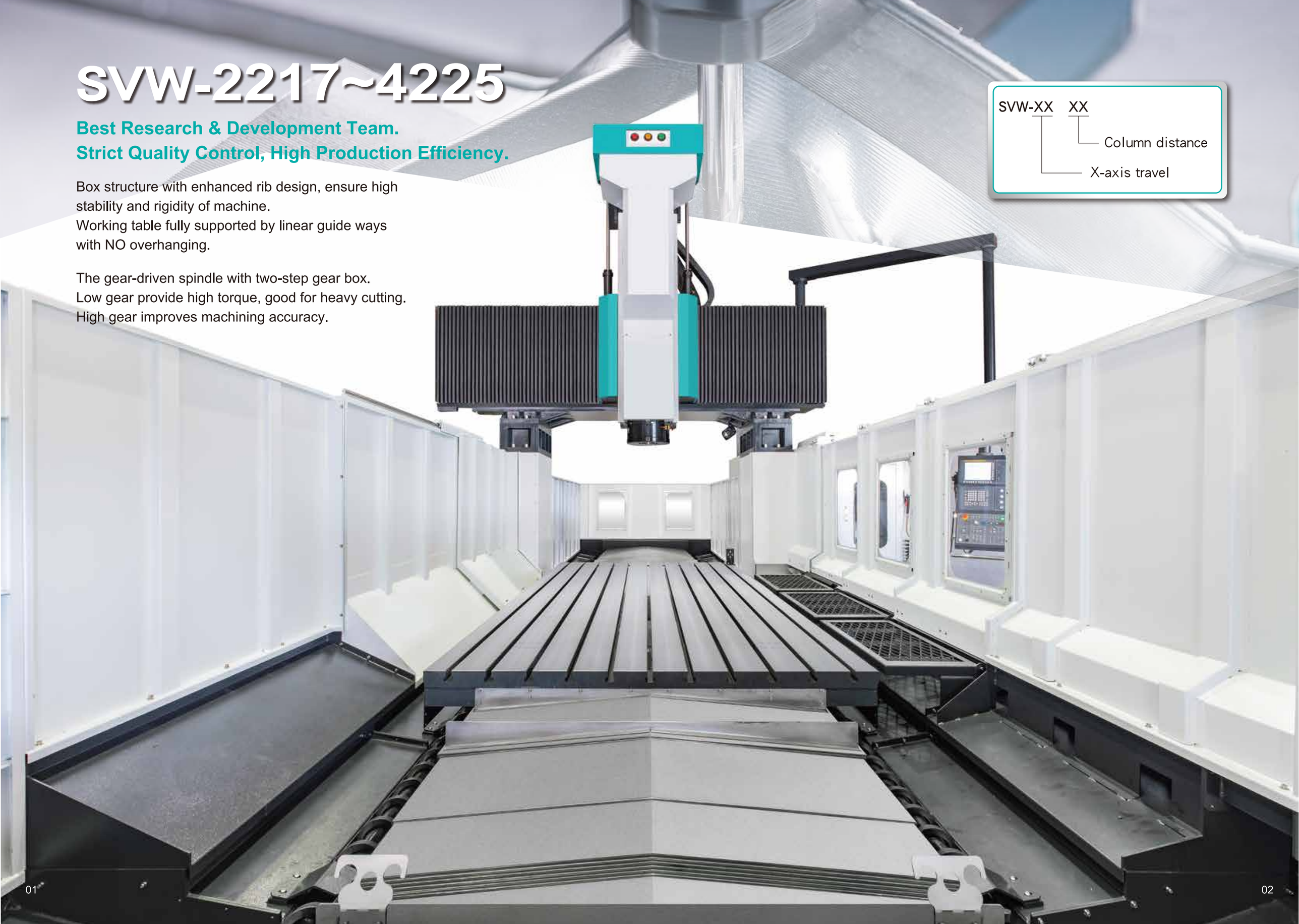

SVW - 2217~4225

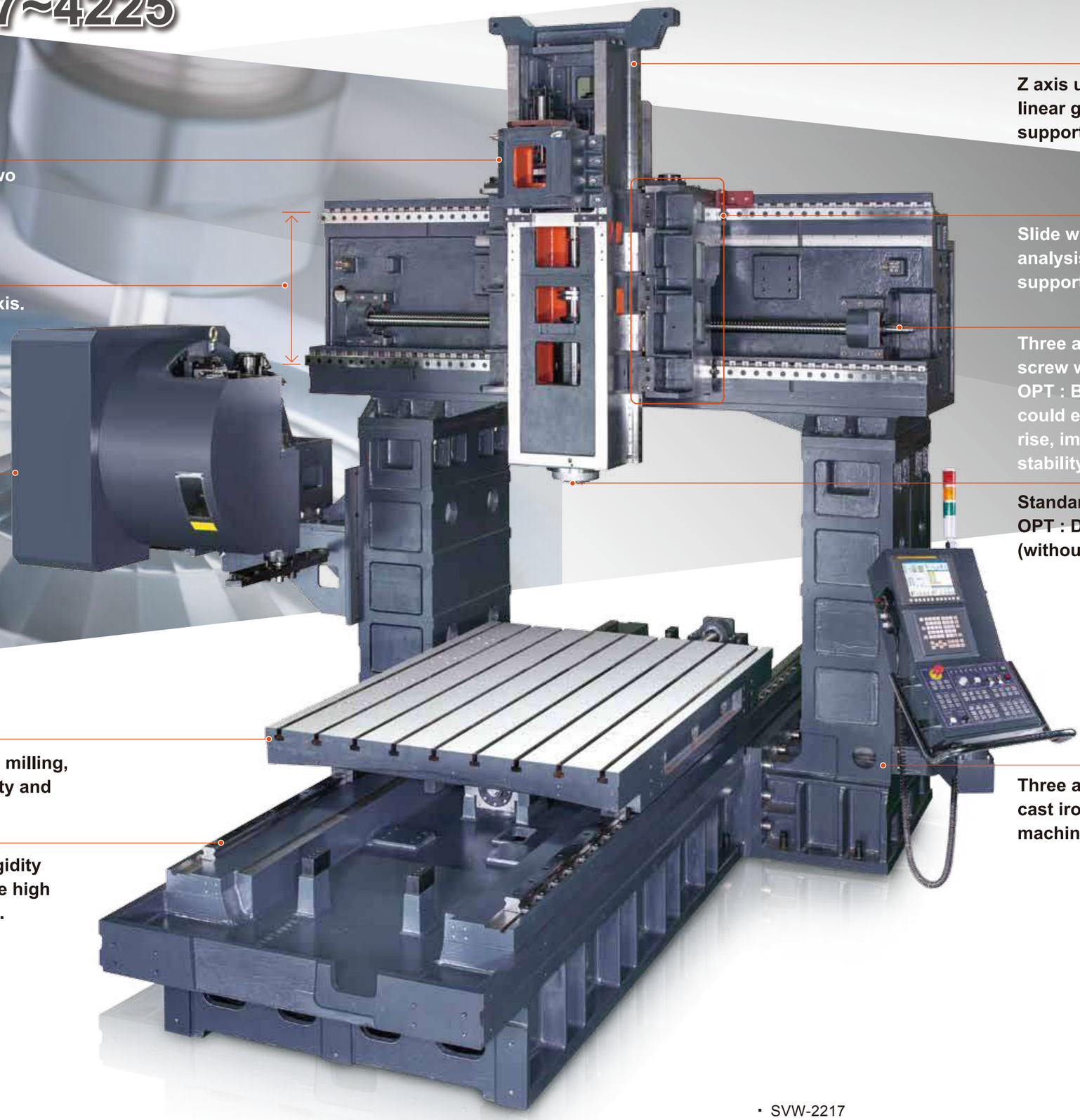

Spindle transmitted by two steps gear box.

Best span design on Y-axis.

Magazine equipped with 24 tools as standard.
The max. tool dia. 200mm (no adjacent tool)

Working table after in-situ milling, effectively improve stability and processing accuracy.

X/ Y/ Z axis utilize high rigidity linear guide ways, provide high speed and high precision.

Z axis uses high rigidity roller type linear guide ways, effectively support heavy cutting.

Slide way makes good use of FEM analysis, provide Ram high rigidity support.

Three axes use high precision ball screw with pretension.
OPT : Ball screw cooling system could efficiently limit temperature rise, improve high precision and stability.

Standard spindle: 6000 rpm
OPT : Direct-Driven spindle 10,000rpm (without gear box).

Three axes and ram use Meehanite cast iron, ensure the greatest machining stability and high precision.

• SVW-2217

SVW - 2217~4225

Automatic Attachment Changer System (AAC system)

To reduce machining time and enhance accuracy, available to equip with automatic accessory change function to carry out a smooth machining sequence.

SVW-4222

*Multi pieces of operator door, AAC system and Pendant Control Panel are OPT.

SVW - 2217~4225

Spindle

■ Gear Type spindle

- Excellent for heavy cutting.
- Spindle is driven by gear box.
- Spindle taper BT / DIN / CAT50
- 4000 / 6000rpm (STD.)

■ Direct-Driven Spindle (OPT.)

- Available for high speed cutting.
- Without gear box.
- Spindle taper BT / DIN / CAT40: 10000 / 12000 / 15000rpm (HSK-A63 is available)
- Spindle taper BT / DIN / CAT50: 10000rpm (HSK-100A is available)

■ Belt Type Spindle (OPT.)

- Spindle taper BT / DIN / CAT50
- 8000rpm (OPT.)

Milling Head (opt.)

90˚angular milling head

- 2000/3500 rpm
- Manual positioning & Automatic positioning

90˚angular extended head

- 800rpm or 3500rpm

Extended milling head

- 3500rpm

Multi angular manual head

- 1200rpm or 3500rpm
- CTS available (optional)

Manual Universal Milling Head

- 2500rpm or 3500rpm
- Hydraulic tool clamping
- CTS available (optional)

Automatic Vertical & Horizontal Milling Head

- A/C Axis 5° positioning
- 3500rpm
- Hydraulic tool clamping/ unclamping
- CTS available (optional)

SVW-2217~4225
Spindle Motor Output Power Chart

STD.

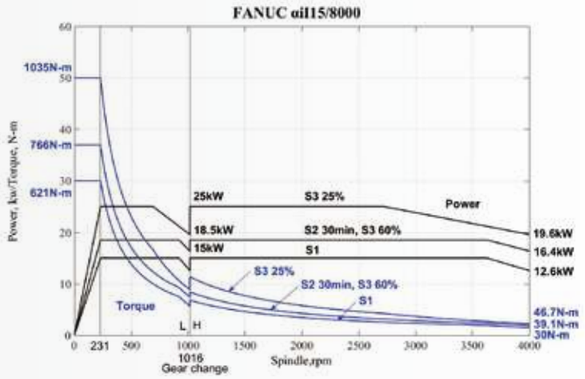

Spindle Motor (18.5/ 15kW), 4000rpm, Gear Box

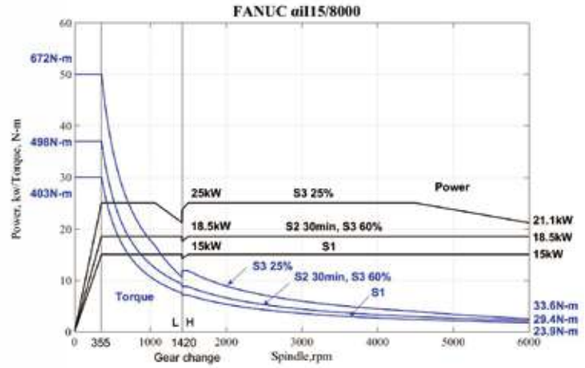

Spindle Motor (18.5/ 15kW), 6000rpm, Gear Box

OPT.

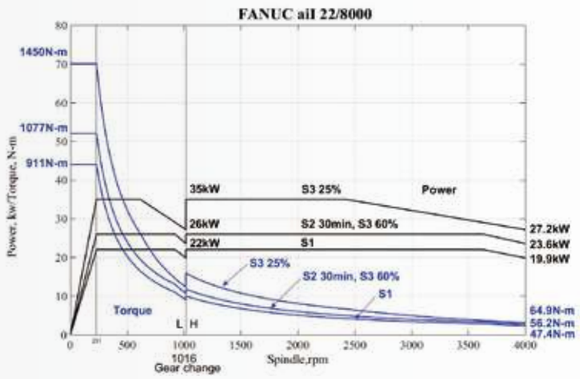

Spindle Motor (26/22 kW), 4000rpm, Gear Box

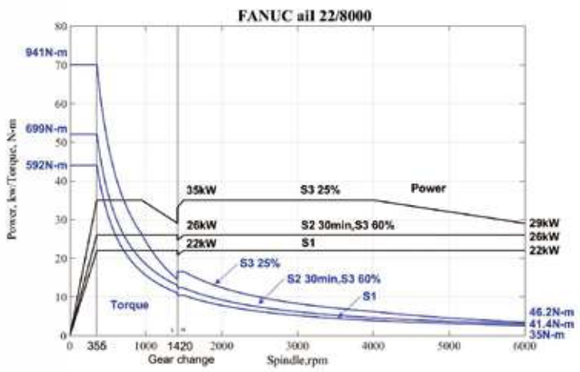

Spindle Motor (26/ 22kW), 6000rpm, Gear Box

*Exclude column distance 1,300mm series.

Working Area

SVW-2113~4225 Without Milling Head

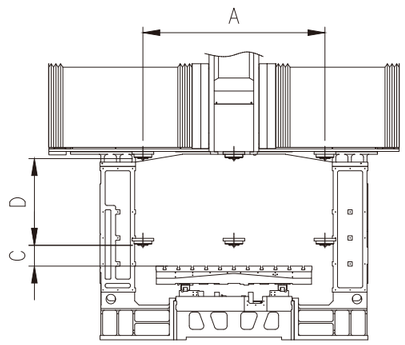

Column Distance	A (Y-axis travel)		Z-axis travel 800		Z-axis travel 1000	
			Column extend			
			0	300	0	300
			C ~ C+D (Spindle Nose to Table Top)			
1300	1200	Long Spindle nose	150~950		150~1150	
1700	1600	Short Spindle nose	240~1040	540~1340	240~1240	540~1540
2200	2100					
2300	2100					
2500	2500					
1700	1600	Long Spindle nose	120~920	420~1220	120~1120	420~1420
2200	2100					
2300	2100					
2500	2500					

SVW-2217~4225 AAC auto change system 90°Milling head 3500 rpm

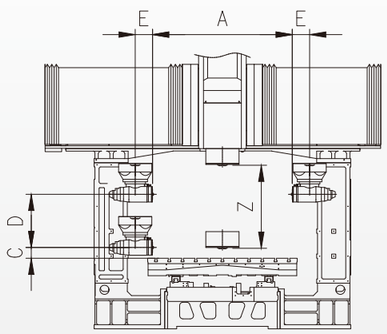

Column Distance	Y-axis travel	A	C	Z-axis travel 800		Z-axis travel 1000	
				Column extend			
				0	300	0	300
	OPT			C ~ C+D (Spindle Nose to Table Top)			
1700	1600	1182	130	130~570	430~870	130~770	430~1070
2200	2100	1682					
2300	2100	1682					
2500	2500	2082					

SVW-2217~4225 AAC auto change system Orthogonal Milling head 3500 rpm -Vertical Machining

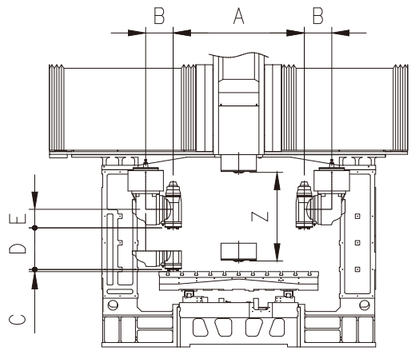

Column Distance	Y-axis travel	A	B	E	Z-axis travel 800		Z-axis travel 1000	
					Column extend			
					0	300	0	300
	OPT				C ~ C+D (Spindle Nose to Table Top)			
1700	1600	980	310	209	24~294 (C=24)	324~594 (C=24)	24~494 (C=24)	324~794 (C=24)
2200	2100	1480						
2300	2100	1480						
2500	2500	1880						

SVW-2217~4225 AAC auto change system Orthogonal Milling head 3500 rpm -Horizontal Machining

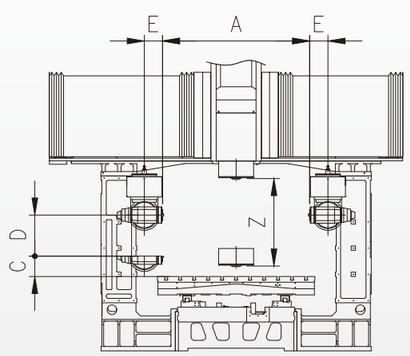

Column Distance	Y-axis travel	A	E	Z-axis travel 800		Z-axis travel 1000	
				Column extend			
				0	300	0	300
	OPT			C ~ C+D (Spindle Nose to Table Top)			
1700	1600	1182	209	233~503 (C=233)	533~803 (C=233)	233~703 (C=233)	533~1003 (C=233)
2200	2100	1682					
2300	2100	1682					
2500	2500	2082					